TELONG ENERGY TECHNOLOGY CO., LTD.

Anjia Industrial Zone, HuanGuan South Road, GuanLan Town, ShenZhen City, GuangDong Province, China

TEL:+86-755-29052355 FAX:+86-755-27981742 E-mail:telongbattery@sztlg.com http://www.sztlg.com

BR2050 Poly-carbonmonofluoride Lithium Button Cell

TECHNICAL DATA

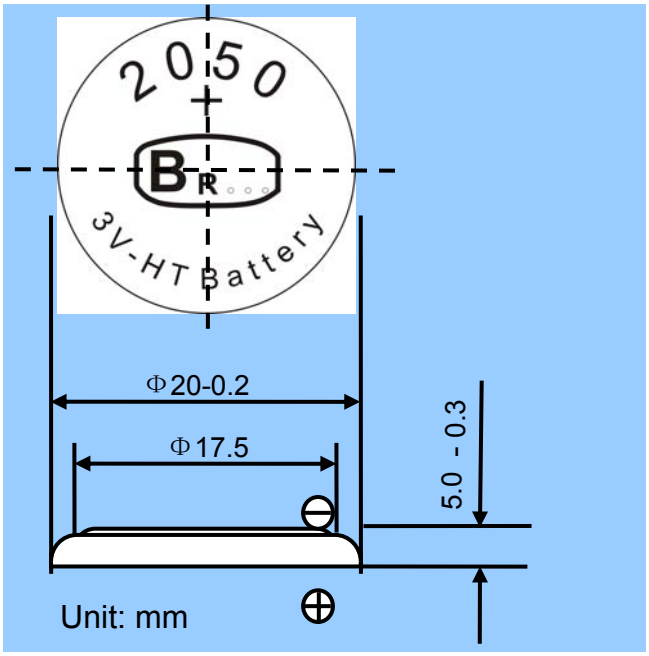

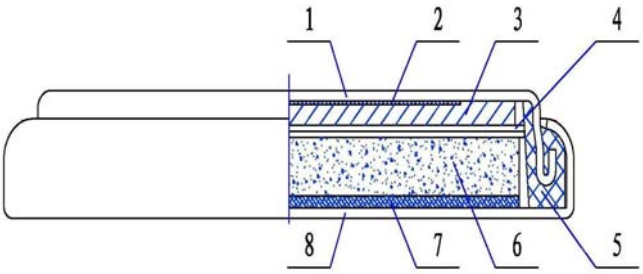

1.Anode shell
2.Anode collector net
3.Anode (slice of lithium)
4.Separator
5.Gasket
6.Cathode
7. Cathode collector net
8.Cathode shell

ITEM	CHARACTERISTICS	NOTES
Nominal voltage	3.0 V	No load
Nominal capacity	250 mAh	
Open circuit voltage	≥3.0 V	No load
Turn on electricity electric current	1mA	Standard electric current
	3mA	The biggest electric current
Storage temperature	20~25℃	RH: 50±10%
The work temperature	0~100℃	Standard temperature scope
	0~130℃	The biggest temperature scope
Standard weight	≥4.1 g	Each cell
Dimension of shape	Diameter: 20.0(-0.2) mm Height: 5.0(-0.3) mm	Using the vernier caliper of the accuracy.
Self-discharge rate	≤ 5%	Stored for 12 months under the condition of normal temperature and humidity.
Appearance	Appearance is level, smooth and clear, no distortion, no rust	Eyeballing
Vibration test	Put the charger on the vibrator and use the 10-15 times per minute frequency to vibrate the charger for one hour, the charger performance is stable.	The charger performance is stable.
Falling test	Put the charger from 2m height to the floor by vertical direction and free direction, after 5 times, the charger performance is stable.	The charger performance is stable.

TECHNICAL CHARACTERISTICS

1. The methods of testing

A: Short-circuit electric current: Use ten thousand use the watch test, each time not over 0.5 second, avoid a repeated test, if need to be test again, time partition should be above in the half an hour.

B: Turn on electricity capacity: At 20~25 temperature of the ℃s and 50 ± 10% degree of humid of the load electric current 1 mA under condition, terminate electric voltage for under the circumstance with 2.0 Vs turn on electricity time continuously the capacity measure 250 mAh.

C: The heat test: Deposit under 100 ℃ heat for 240 hours, didn't leak a liquid.

D: Lead to turn on electricity to bear to leak a liquid test: Turn on electricity continuously for 5 hours after the battery terminate electric voltage attain a 2.0 V, didn't leak a liquid.

2. Caution

2.1 Install and use the cells right, avoid short circuit and shun reversing anode and cathode.

2.2 Check the cell polarity and the equipment including its conjunction before installing, ensuring the cleanness and conductibility, the equipment should not cause short circuit.

2.3 Do not mix the new cells with the old ones, and not mix the different volume, brand, grade, type cells lest affecting characteristics and the possibility of leaking.

2.4 The cells should not be heated and collided after being used lest explosion, damage and liquid-leaking.

2.5 To avoid danger, don't put the cells into the fire disassemble the cells.

2.6 Taking care of the micro-cells well lest the infants swallow.

2.7 Pay attention to the storage expiry of the cells.

3. 【SPECIFICATIONS】

Nominal Capacity		**250 mAh**
Nominal Voltage		**3.0 V**
Standard electric current		**1 mA**
The biggest electric current		**3 mA**
The work temperature		**0~100 ℃**
Weight		**≥4.1 g**
Dimensions	**Diameter**	**$20.0_{-0.2}$ mm**
	Height	**$5.0_{-0.3}$ mm**